WORLD CLASS ARCHITECTURAL PRODUCTS
HANSEN ARCHITECTURAL SYSTEMS
5500 SE ALEXANDER ST. HILLSBORO OR. 97123
PH. 503-356-0959 FAX 503-356-8478

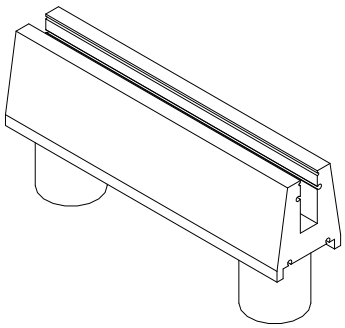

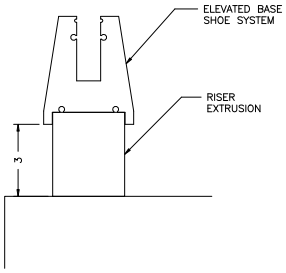

ELEVATED BASE SHOE OPTION

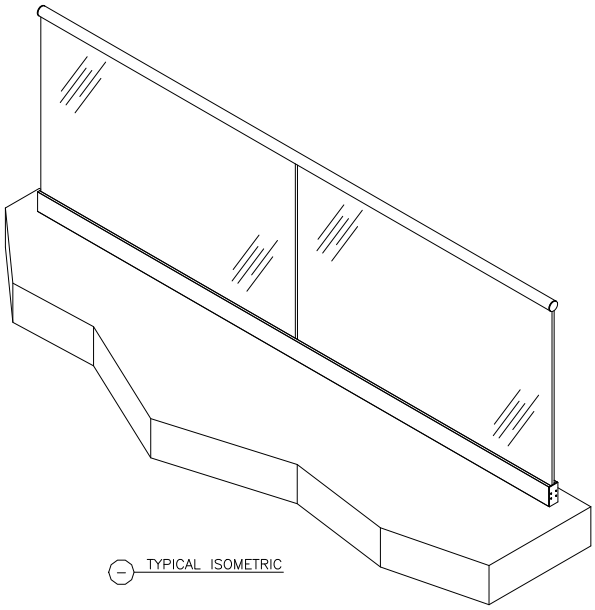

TYPICAL ISOMETRIC

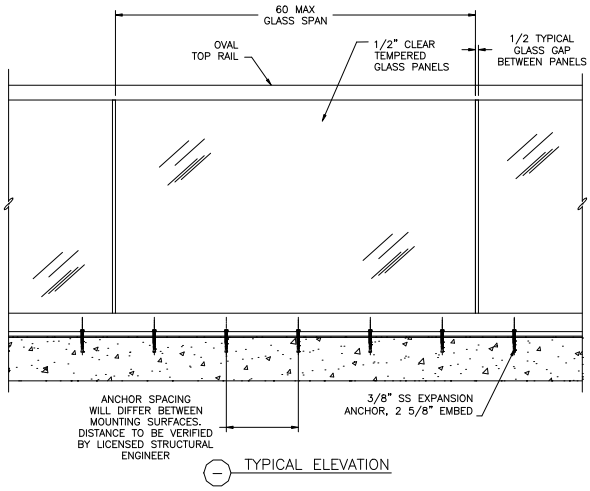

TYPICAL ELEVATION

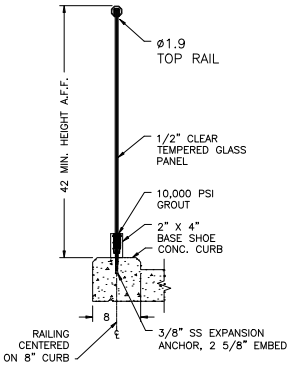

TYP. SECTION ANCHOR MOUNT

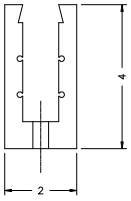

2" X 4" BASE SHOE

1.9"ø TOP RAIL

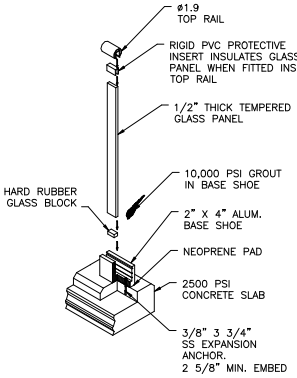

TYP. CONNECTION DETAILS
CONC. MOUNT WITH WEDGE ANCHORS

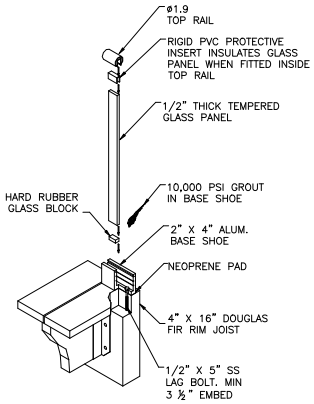

TYP. CONNECTION DETAILS
WOOD MOUNT WITH LAG SCREWS

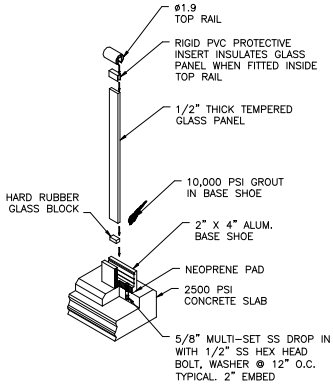

TYP. CONNECTION DETAILS
CONC. MOUNT WITH SHALLOW DROP-IN ANCHORS