WORLD CLASS ARCHITECTURAL PRODUCTS
HANSEN ARCHITECTURAL SYSTEMS
5500 SE ALEXANDER ST. HILLSBORO OR. 97123
PH. 503-356-0959 FAX 503-356-8478

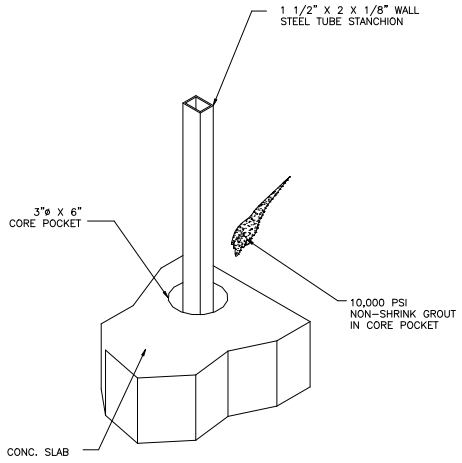

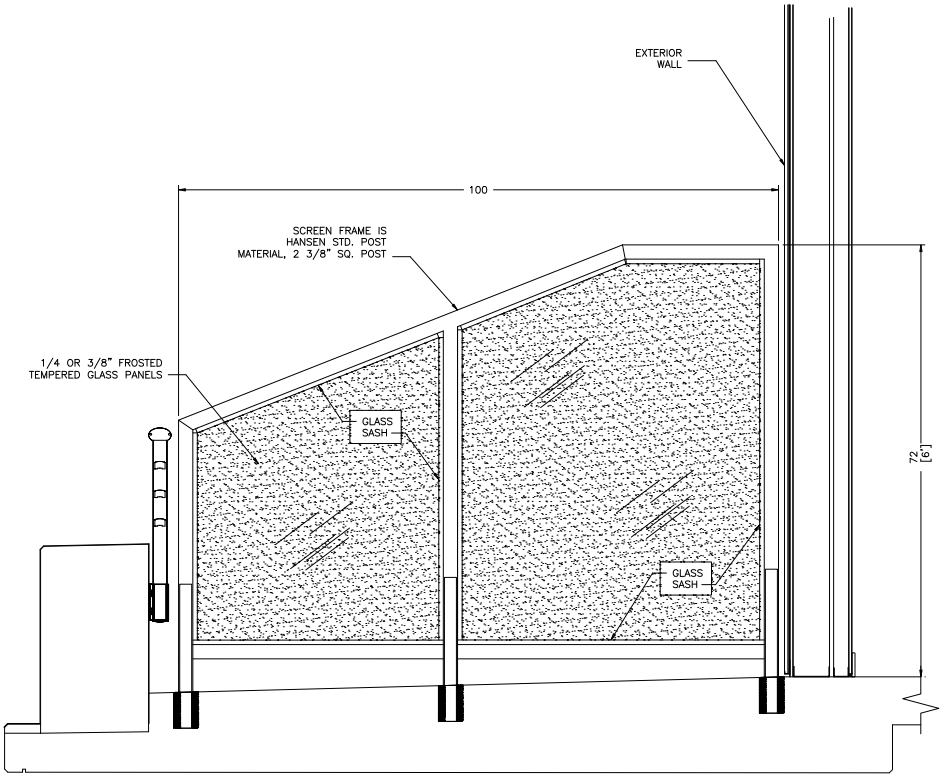

717 STYLE ALUMINUM PRIVACY SCREEN SYSTEM
www.aluminumrailing.com