PRECISION AUTOMATIC ELECTRIC DISAPPEARING STAIRWAY

SEE NEXT PAGE FOR KEY
AND IMPORTANT DIMENSIONS

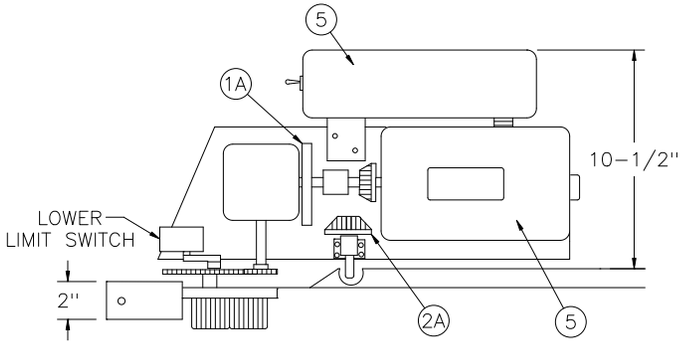

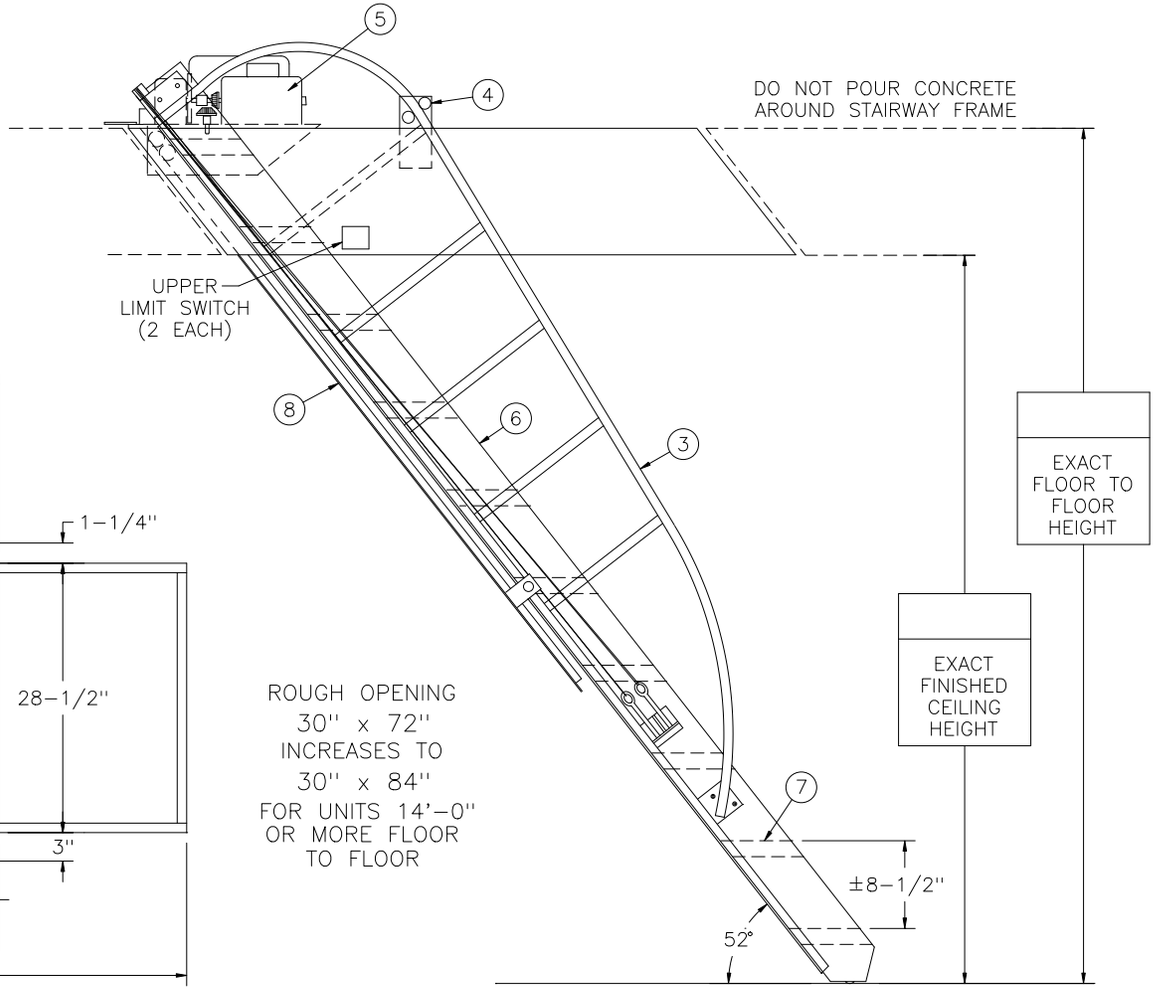

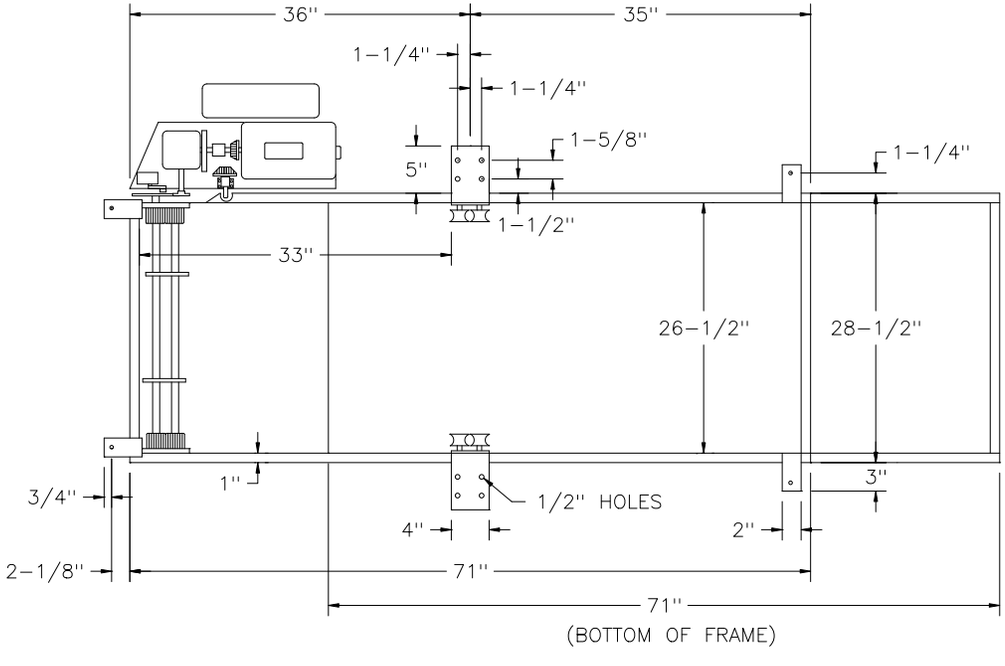

ROUGH OPENING
30" x 72"
INCREASES TO
30" x 84"
FOR UNITS 14'-0"
OR MORE FLOOR
TO FLOOR

NOT TO SCALE

AEA

Precision Ladders, LLC
P.O. BOX 2279 Morristown, TN 37816-2279
Ph: (423) 586-2265 Fax: (423) 586-2091
www.PrecisionLadders.com

WORK ORDER: ( )	DWG. CHECK	ARCH'T OR ENG'R.	PROJECT		PRECISION REP
	BUILT BY:	PURCHASE ORDER	REVISION	PURCHASER	SERIAL#
	CHECKED BY:	DRAWN BY: JEB	DATE 11/30/04	MODEL# AE-	QTY.